What you need for cleaning

Selecting suitable cleaning agents and cleaning equipment

The Geberit AquaClean cleaning set (art. no. 242.547.00.1) includes a ready-made cleaning agent that is optimal for cleaning all Geberit AquaClean surfaces.

CAUTION
Cleaning with aggressive descaling and cleaning agents
Aggressive descaling and cleaning agents can cause surface damage.
- Only use Geberit AquaClean descaling agent in the device.
- Only use cleaning agents permitted by Geberit.

Geberit AquaClean consumables


Geberit AquaClean cleaning set (art. no. 242.547.00.1)


Geberit AquaClean descaling agent (art. no. 147.040.00.1)

Permissible cleaning agents


Only skin-friendly cleaning agents


Only liquid cleaning agents


Preferably water-diluted cleaning agents


Cleaning agents with a low acid content (e.g. diluted citric acid)


Low-foaming cleaning agents

Permissible cleaning equipment


Soft, fine-pored sponges


Lint-free, soft cloths which are free of dust


Toilet brush

7385868683 © 02.2021
967.235.00.0(01)

GEBERIT

GEBERIT AQUACLEAN TUMA CLASSIC

QUICK GUIDE

GEBERIT
DOWNLOAD THE APP AND REAP THE REWARDS
www.geberit-aquaclean.com

Getting to know your device

The device at a glance

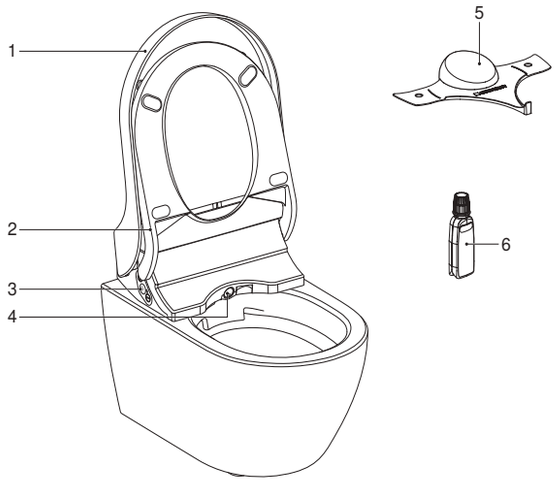

1 WC lid
2 WC seat ring
3 Lateral control panel with status LED
4 Spray arm with spray nozzle
5 Spray shield
6 Geberit AquaClean descaling agent (art. no. 147.040.00.1)

Lateral control panel

The shower toilet functions of the device can be operated from the lateral control panel.

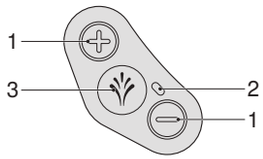

1 <–>/<+> button: increase or decrease the spray intensity
2 Status LED
3 <Shower> button: start or stop the anal shower or the Lady shower

How to use the device

Using the anal shower

Briefly press the <Shower> button on the lateral control panel or on the remote control once.

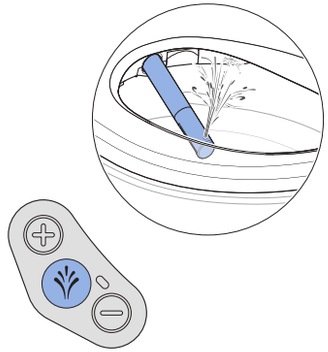

You can stop the shower procedure early by pressing the <Shower> button once again.

Set the spray intensity

Press the <+> button to increase the spray intensity.
Press the <–> button to decrease the spray intensity.



You can set the spray intensity in 5 stages.

Geberit Home App

You can execute the following functions and settings via the Geberit Home App:

- using remote control functions
- adjusting and saving basic settings
- contacting Geberit customer service
- registering devices and extending warranty services
- updating the firmware

You can call up the following information via the Geberit Home App:

- step-by-step instructions on maintenance, descaling and cleaning
- explanatory videos on maintenance, descaling and cleaning
- error messages
- user manuals

The Geberit Home app is available free of charge for Android and iOS smartphones in the respective app stores.

iOS:

Android: